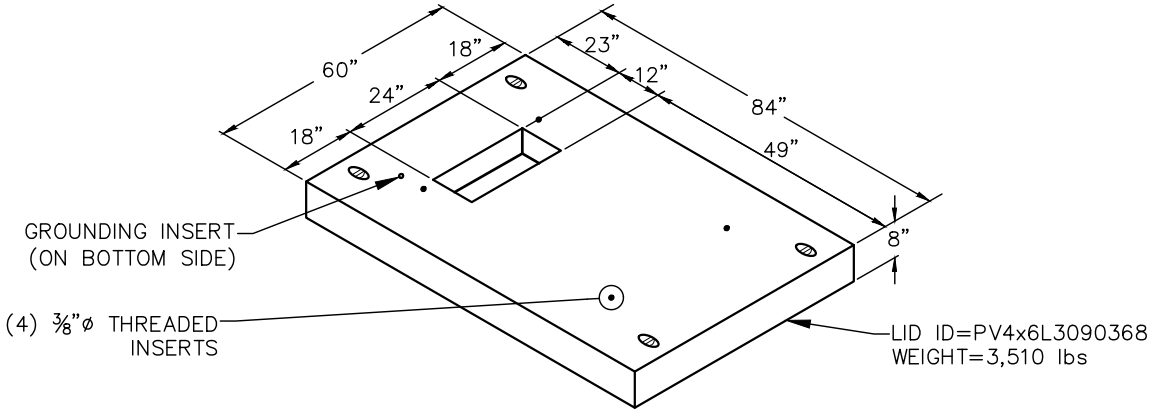

ZG 571 200-AMP, SINGLE-PHASE PRIMARY METERING CABINET PAD (SEE ZG 616 4x6 BASE)

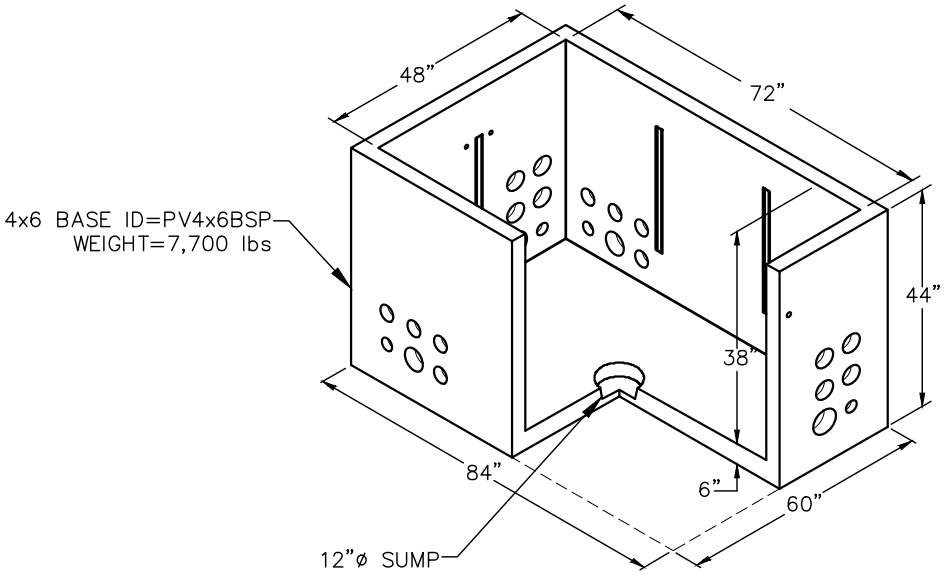

4x6 BASE (REF ZG 616)

NWPX GENEVA	SHEET: ZG 571 3090368	PROJECT: ISOMETRIC VIEW, PACIFICORP	
	SCALE: N.T.S. / DRAWN: JJOLLEY	LOCATION: SALT LAKE - OREM - ST. GEORGE PH: 801-225-2416	1 of 3
	DATE: 2-24-2015 / TITAN ID: AS SHOWN		

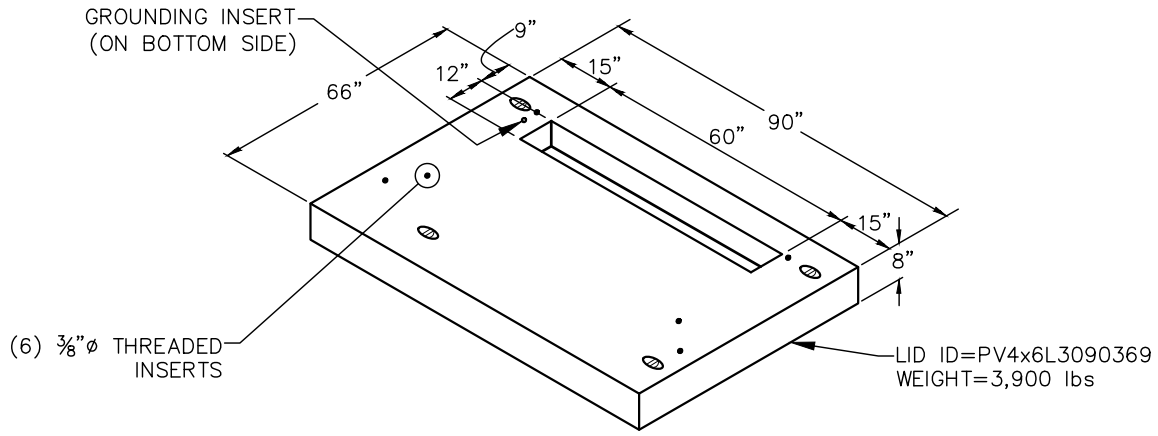

ZG 571 200-AMP THREE-PHASE PRIMARY METERING CABINET PAD (SEE ZG 621 4x6 BASE)

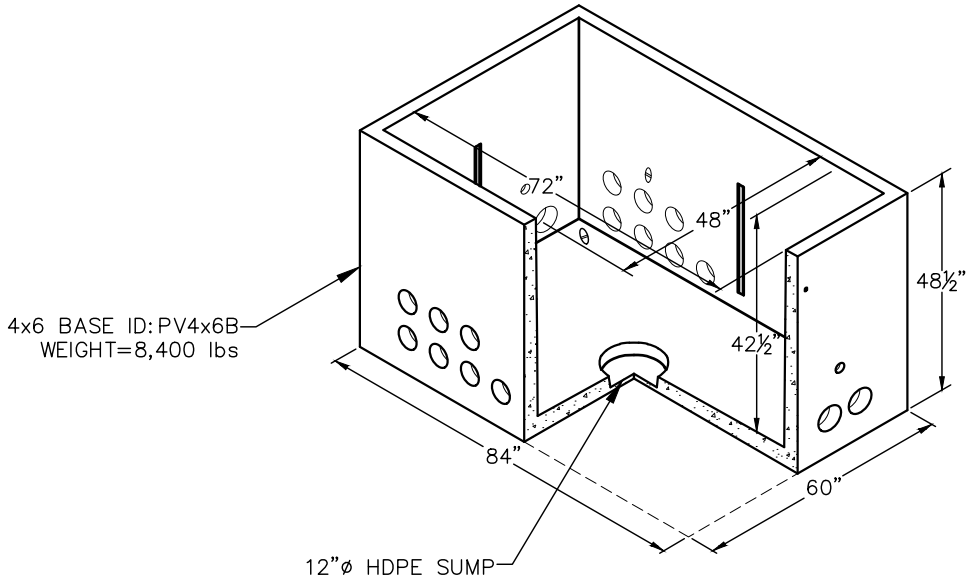

4x6 BASE (REF ZG 621)

NWPX GENEVA	SHEET: ZG 571 3090369	PROJECT: ISOMETRIC VIEW, PACIFICORP	
	SCALE: N.T.S. / DRAWN: JJOLLEY	LOCATION: SALT LAKE - OREM - ST. GEORGE PH: 801-225-2416	2 of 3
	DATE: 2-24-2015 / TITAN ID: AS SHOWN		

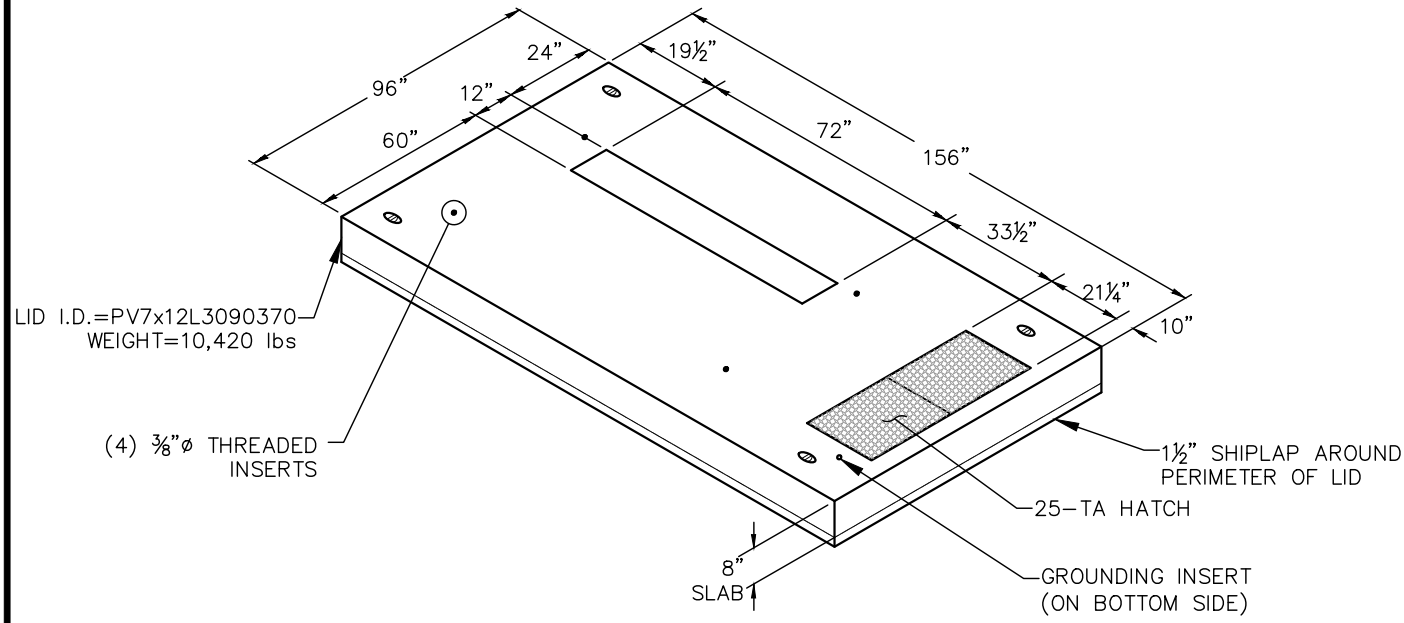

600-AMP, THREE PHASE PRIMARY METERING CABINET PAD (SEE ZG 562 7x12 BASE)

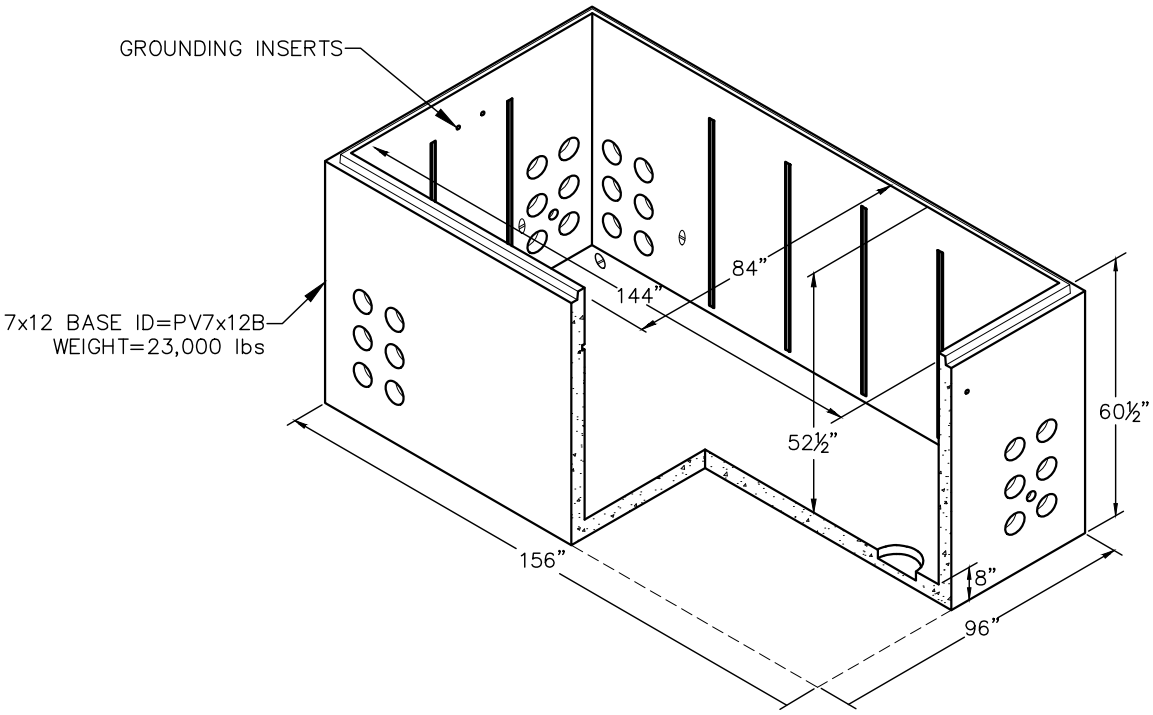

7x12 BASE (REF ZG 562)

NWPX GENEVA	SHEET: ZG 571 3090370	PROJECT: ISOMETRIC VIEW, PACIFICORP	
	SCALE: N.T.S. / DRAWN: JJOLLEY	LOCATION: SALT LAKE - OREM - ST. GEORGE PH: 801-225-2416	3 of 3
	DATE: 2-24-2015 / TITAN ID: AS SHOWN		